Passione SPA 450

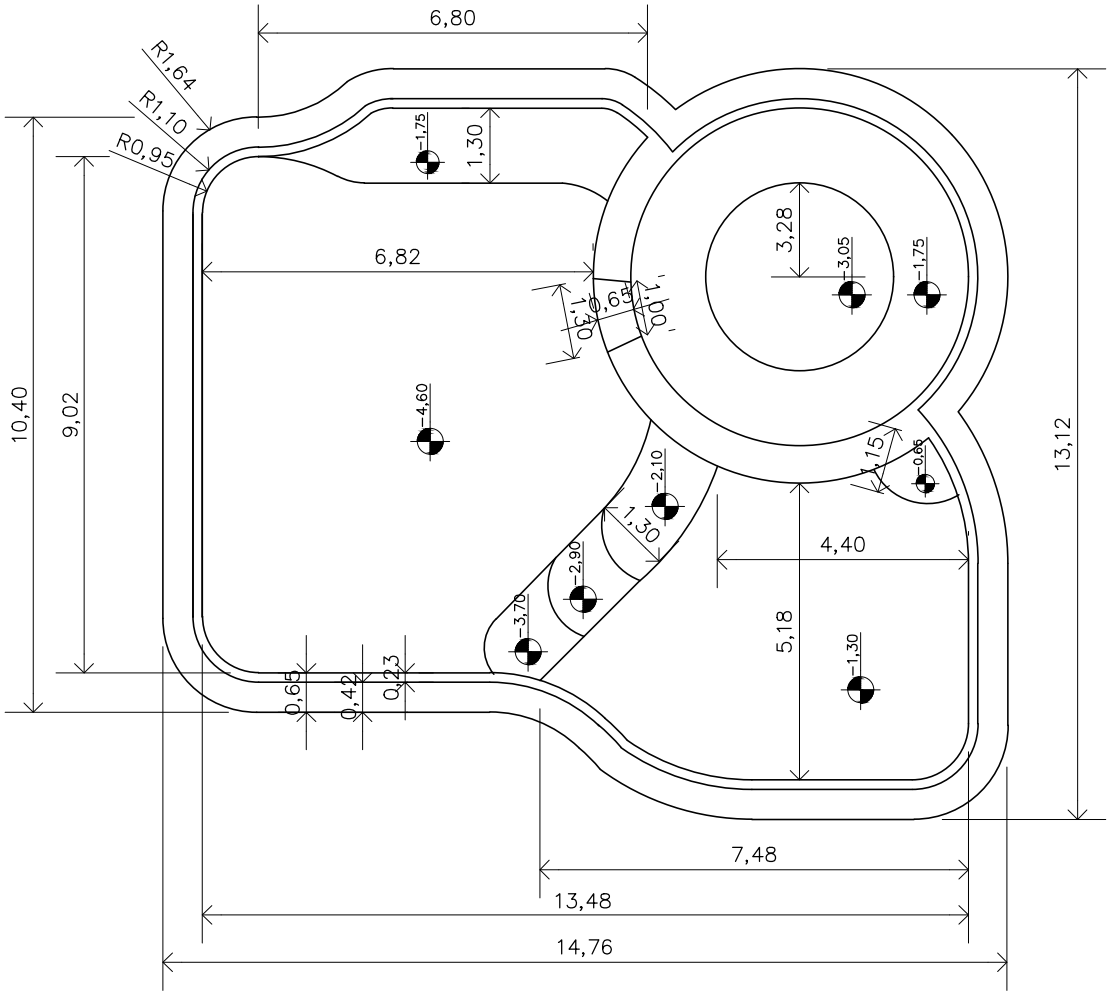

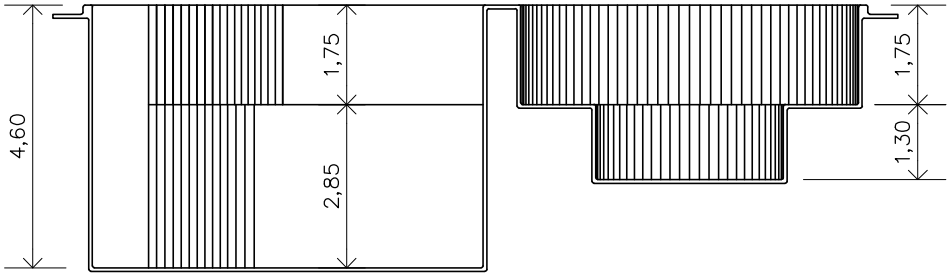

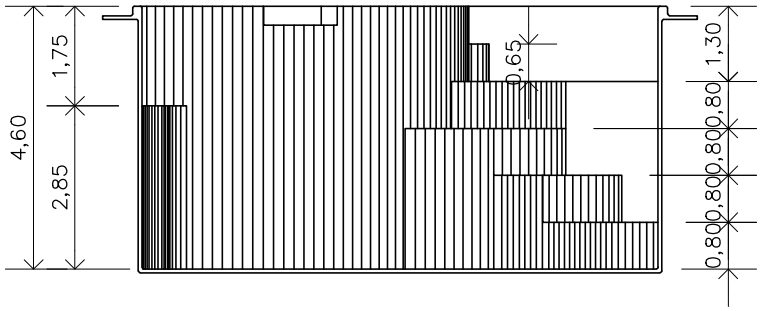

Gallon (rough measurements):	Weight:
2636,43 gal	524 lb